# Network Centric Manufacturing Phase I

## PROBLEM / OBJECTIVE

The M2 Machine Gun is a 1930's designed weapon system that continues to serve the armed forces. The procurement of spare parts over the years has been a cumbersome process. Two dimensional paper drawing designs along with manual machining centers were the processes used to provide replacement parts. In addition, the parts were fabricated at government installations for many years.

Recent conflicts have placed a burden on the legacy methods of replacement part procurement. This has created the need for change that exceeds what the legacy systems provided in the past. Computer-Aided-Design (CAD) systems, Computer-Numerically-Controlled (CNC) machining centers, and Coordinate Measuring Machine (CMM) programs are the processes required to meet the replacement part demands. Picatinny Arsenal set out to meet the change requirements in developing the three dimensional CAD files, the machine code to run the CNC machining centers, and the CMM program files to assure the parts are right the first time, every time.

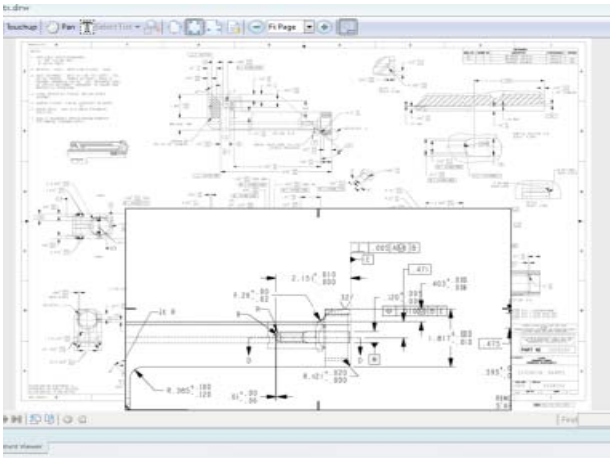

2D Drawing of the M2 Gun Barrel Extension

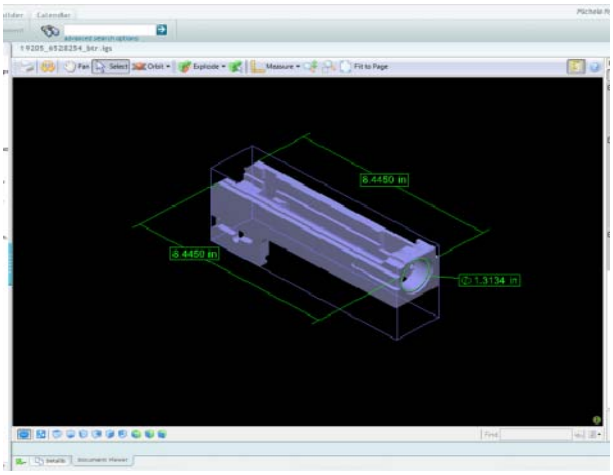


3D View of the Gun Barrell Extension

## ACCOMPLISHMENTS / PAYOFF

***Process Improvement:***

The key innovation was the development of the Manufacturing Process Data File (MPDF). This is a comprehensive package to facilitate the manufacture of replacement parts by industrial base suppliers. The MPDF includes all 3D files, machine code, and CMM inspection files to enable the supplier to reduce their start to manufacture time and provide parts quickly. The MPDF also notes any special tooling and a detailed process router to define the manufacturing and special processing requirements.

***Implementation and Technology Transfer:***

The team also developed a method for the suppliers to input work-in-process status to an internet portal that would provide the procurement activity with real-time progress status. A software vendor, Co-Exprise, provided support for this effort. The internet portal was used by the suppliers to provide updates to their manufacturing status.

# Network Centric Manufacturing Phase I

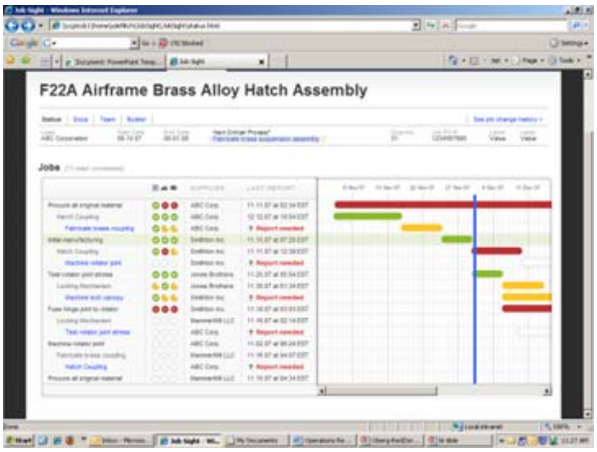


Internet Dashboard

M2 Machine Gun

## POINT OF CONTACT

**POC:** Stephen Luckowski
**Phone:** (973) 724-3100
**E-Mail:** stephen.luckowski@us.army.mil